JULY, 1978
Vol. 24 — No. 3
Fifty Cents

Precision SHOOTING

a magazine for shooters by shooters

PRECISION SHOOTING

PUBLISHED MONTHLY BY PRECISION SHOOTING, INC.

Editorial and business offices at
Box 6
Athens, Pa. 18810
Tel. 717-888-7801

Editor — Ritchie Moorhead
President — A. H. Garcelon
Vice-President — Dermot C. Reilly
Treasurer — Ritchie Moorhead
Corp. Clerk — George J. Stannard, Jr.

Precision Shooting is published monthly by Precision Shooting, Inc. Rates: U.S., Canada and Mexico $6.00 a year; $11.00 for 2 years; all other countries $7.00 each year.

Place of Publication — Elmira Quality Printers, Inc., Elmira, New York. Second-class postage paid at Elmira, New York.

NOTICE TO ADVERTISERS

PRECISION SHOOTING is printed by offset. Display copy is to be furnished by the advertiser. Advertising plates will be made from negatives, good black and white glossy prints or clear copy. Displays will be made to Advertiser's specifications. All normal composition will be set according to our own standards. Rate cards will be mailed to Advertisers on request.

The Precision Shooting back issue file awaits your request. We have recently acquired some additional back issues which will fill a few of the lower piles.

PS STAFF

PRESIDENT
Dr. A. H. Garcelon
133 State St.
Augusta, Maine 04330

EDITOR
Ritchie Moorhead
Box 6
Athens, Pa. 18810

COLUMNISTS:

Technical Editor
M. H. Walker
R.D. 1, Warren Road
Mohawk, N.Y. 13407

Single Shot Rifles
Claude E. Roderick
509 Fifth Street
Monett, Missouri 65708

Benchrest - Feature
Lt. Col. Rick Hornbeck
R.D. 2, Box 220
Pine Bush, N.Y. 12566

Hunter Class
Walter D. Pereira
38 Gloucester Court
E. Brunswick, N.J. 08816

Benchrest Down Under
The Australian Scene
Ann Brummell
24 Septimus Ave.
Punchbowl, N.S.W.
Australia 2196

From The Workbench
Fred Sinclair
1200 Asbury Drive
New Haven, Indiana 46774

Benchrest Headlines — 25 Years Ago
A. H. Angerman
2528 Deepwood Drive
Wilmington, Delaware 19810

Advertisers Index

Bonanza Sports Mfg. Co. 11
B-Square 16
Custom Bullets 7
Custom Products 13
Davidson, A. 9
Douglas Barrels 16
Fajen, Reinhart 15
GTB Bullets 9
Hart Rifle Barrels 4
Hart, R.W. 15
Heatbath Corp. 10
Hidalgo, T. 13
Hodgdon Powder Co. 4
Hudson Optics 8
IBS Memo 3
Korzinek, J. 9
Longo, Ed. 14
L-Optics 12
Masker, Seely 7
Pease, B. 9
Precision Shooting 7, 10, 16
Remington 5
Saunders Gun & Machine 7
Schultz Bros., Inc. 5
Shooters Accessory Supply 13
Sinclair 8
Trading Post 8
Unertl, John 2
Wichita Engineering 10

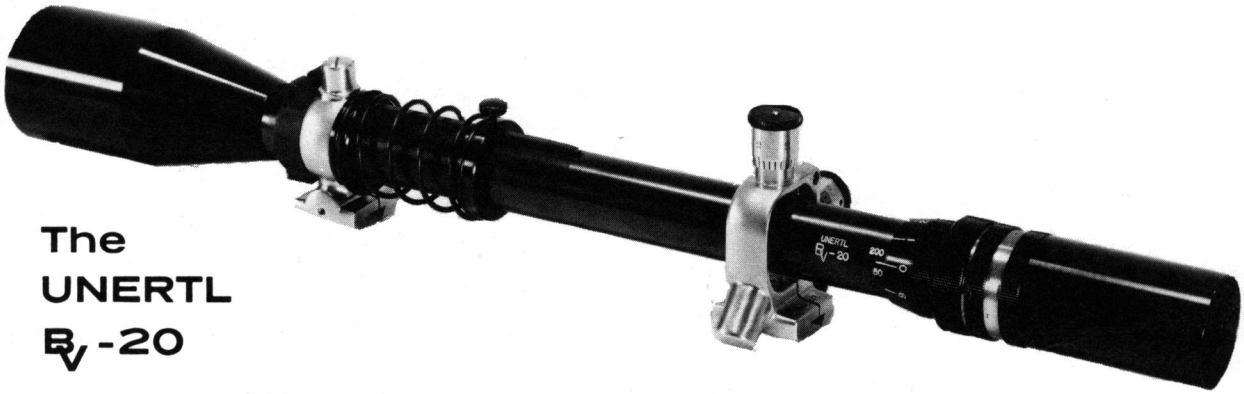

The
UNERTL
BV-20

A really new and patented telescope specifically optimized for the serious bench and varmint shooter.

Features . . . 20X magnification, 43mm objective, 17⅞" overall length and weight of 19 or 21¼ ounces depending on accessories.

Send $1 for our catalog

JOHN UNERTL OPTICAL CO.

3551-55 East St. Pittsburgh, Pa. 15214

"The Editor's Hour"

July 1978

As we write this the Super Shoot experience for 1978 is only days old. Again it was a huge experience with 280 plus for the Heavy Varmint event. A good shoot throughout, it was enjoyed by all who attended.

Competition was fierce and many good groups simply were not good enough. I fired a .123 at 100 yards and it was third to a .091 and a .118. It was that kind of weekend.

Culminating the PPC vs Remington BR friendly confrontation was Jim Stekl with his BR. Placing well in the Sporter put Jim in good position to make his move.

In Heavy Varmint he took the Grand Aggregate and finished with the Two Gun Aggregate in his pocket as well. More on this performance as the shoot reports arrive. Take that you PPC shooters!

* * *

Not all of the Super Shoot news was good. It appears that for the first time our sport has been subject to the tinkering and mischief so commonly associated with society today. I am referring to distrubances of equipment and rifles while the owner was not around.

During the time between Sporter and Heavy Varmint Skip and Johanna Gordon experienced optical troubles diagnosed as caused by human hands, not accident or equipment failure. It would appear that there was a "get Skip" motive behind it. If so it is most regretable for it reveals that there are some small minds playing our game.

It is OK to disagree with someone but it is very low and childish to try to "get even" in such a fashion. The accepted method of settling such differences is the gentlemanly approach. Discuss matters and settle things over a steak dinner. Do not sneak around in the night and reveal your true character.

If this approach is the one used we are sorry that our ranks have been infiltrated by fools. May we purge ourselves of them in short order.

The other option is children fooling around while the parents compete. This is also possible but not as likely for it has never happened in such volume before. Occasionally a kid will touch something or mess around with the result being a foot in the rear or a stern warning.

If the events mentioned were done by kids it might be best to send them packing. We do not need that kind of problem child for he may just grow up to be the same type of adult problem.

In either case the disturbances, and there were a lot of them involving others as well, are not looked upon with favor. Many shooters indicated that they will deal with those who touch their equipment first and ask questions later. I know I will.

It is not likely that we will ever find out who did the dirty deeds but if you have any information relevant to the situation I would like to know about it. I will either inform the readers, if it is a "no problem" accident, or pass the information along to those parties who were effected by the mischief. They can follow it in any way that they choose.

Many of us hope that we will see no more of this and seek the cooperation of all concerned to aid in that goal. Our sport has been one free of thievery and mischief. May it continue to remain that free.

* * *

Have you ever watched a shooter dump about 300 primers out of the segmented trays they are shipped in and into a box, jar or cup so that they rest against each other? I have.

So did Scot Heter of CCI. His reaction was immediate. Would you PLEASE mention in print that this is a serious mistake which could result in harm.

Scot informs us that loose primers are capable of igniting themselves if enough are rubbed together in a jar or tray. The resulting action is a small bomb of the most serious nature. Tiny fragments will fly in all directions as the entire mess takes off.

Add to this the residue of priming compound which collects in that jar over the years and any moment can be the one that sets it all off.

Scot gives graphic examples of what can happen and they are not pretty. None of us want to see that type of accident on a rifle range. Think of how the anti-gunners would jump on it.

In talking about this to several people some of them indicated that they had been doing this for many years with no accidents. They are lucky. I only hope that they are as lucky for the next few years. Please do not put your primers in a cup or jar. If federal shipping regulations call for segmented rows there must be a reason.

INTERNATIONAL BENCHREST SHOOTERS

IBS OFFICERS

PRESIDENT
Wallace E. Hart
Montgomery St.
Nescopeck, Pa. 18635
Phone: 717-752-3481 Days
717-752-3776 Evenings

VICE PRESIDENT and MATCH SCHEDULE CHMN.
James Stekl
R.D. 1, Robinson Road
Mohawk, N.Y. 13407
Phone: 315-866-1769

2ND VICE PRESIDENT
Robert A. White
Box 58
Chester, N.J. 07930
Phone: 201-879-6122

TREASURER
John Moulthrop
804 W. Lockhart St.
Sayre, Pa. 18840
Phone: 717-885-1221

SECRETARY
Charles Fountaine
R.D. 2
Fort Ann, N.Y. 12827

PAST PRESIDENT
Jack Deming
R.D. 1
Lawrenceville, Pa. 16929
Phone: 717-827-2888

RECORDING SECRETARY
Evelyn Richards
411 North Wilbur Ave.
Sayre, Pa. 18840
Phone: 717-882-5795

IBS Memo

IBS Targets — Charter and Life Members

100 or 200 yard benchrest targets are $20.99 per 500. 300 yard benchrest targets are $22.08 per 500. 100 yard hunter targets are $13.48 per 250. 200 yard hunter targets are $15.39 per 250.

All target orders, as usual, are figured with a 10% discount for affiliated clubs, plus handling and shipping charges.

Mail order to: Evelyn Richards, 411 N. Wilbur Ave., Sayre, Pa. 18840.

The annual membership fee is $10.00 — Life membership in IBS has been set at $125. Apply to the recording secretary for enrollment. IBS Affiliated Club Membership $10.00.

New rule books now available, with minor changes — plus IBS By-Laws at $1.00 per copy.

IBS Charter Membership Patches and regular patches are available at $2.00 each.

When ordering **Charter Membership patches,** please indicate your 1970 Card Number.

COVER STORY

Presentation of the cover for this month finds us in a very pleasant position. Here is one man who has done much for the shooting sports over the years. He has asked little in return. In fact, if he knew that we were going to put his picture on this cover he would most likely have requested that we not do it for he has done nothing special to merit it. He is that kind of man.

With all of his success and good fortune he remains, by choice, out of the limelight as much as possible. Content to do the best job possible for the shooters who buy his product and to attend as many rifle matches as possible he is known and revered by many.

A look at this man reveals that he is content with what he has accomplished. Never one to be without an opinion he can be found discussing about anything with anyone. A friend to those he meets can accurately describe Clyde Hart.

Preparing information on Clyde would take more pages than this magazine can offer at any one month. Instead we chose to highlight the man as a man and craftsman. We turned to his longtime friend and fellow machinist Carl Lynn for some comments. What follows is the view of one man toward another. It is accurate and reveals much more than facts and figures.

From our point of view we count ourselves lucky to have been able to associate with the likes of Clyde Hart. We are luckier still to be able to associate with Clyde. He is a man among men who are fast becoming a vanishing breed. In this day of mass production and consumer rip-offs it is good to be able to turn to men like Clyde for quality products. Without reservation Clyde is the leader of the quality barrel makers.

We now turn to Mr. Carl Lynn, IBS Past President, for some appropriate remarks.

Comments to accompany this months cover can neither be brief nor modest to portray Clyde R. Hart. Regardless of how a poll would be worded, if accurately and honestly presented to the shooting world, the result would be that he is the greatest rifle barrel maker the world has ever known.

But his success story only starts here. Clyde Hart has, without justifiable doubt, contributed more to the art and sport of rifle shooting than any other person living or dead. He is one of the very few truly altruistic men in the sport. I have observed his many deeds of service, many acts of kindness and many words of advice offered without expectation of fee or reward.

Nearly ten years ago this writer asked himself what secret this great rifle barrel maker could possibly possess to make a barrel shoot, when properly installed, so phenomenally accurate. Having had 25 years of machine shop experience I hoped by seeing his equipment that the answer would be obvious. I asked if I may visit his shop and was cordially welcomed.

After looking around the shop for a relatively short time the "secret" stood out like a sore thumb. The "secret" was even greater than most would expect. Clyde Hart's "secret" to being the world's greatest barrel maker is that he has no secrets. He will answer any question or demonstrate any portion of machining technique to anyone with a sincere and unselfish desire for knowledge.

But there is one big difference between Clyde and either his predecessors or competitors. He uses standard machine shop practices but performs these standard applications of common ordinary shop practice better than they have ever been done before. Clyde can see more with his eye than most men can measure with a micrometer and feel more with his fingers than most men can learn from a .0001 graduation indicator.

A specific experience will demonstrate adequately. While watching Clyde ream a rifle barrel he interrupted our conversation by saying "that reamer isn't cutting right". When asked how he knew this he answered "I can feel it". The reamed hole looked good. I looked at the reamer under magnification and couldn't see the slightest fault with the cutting edge. Clyde "stoned" the reamer, reamed another barrel and even I could see a significant improvement. It is this kind of sixth sense, in addition to exacting physical measurements, that makes every rifle barrel Clyde Hart produces a match winner. It is a matter of honor and pride not to finish a barrel that he is not sure will possess match winning capability. Clyde Hart will not rush, short cut, compromise quality, accept faulty material or produce faulty work. He does work long hours.

If these are guarded secrets of the worlds greatest barrel maker then I have betrayed a trust, presumed on friendship, and divulged his secret.

Clyde Hart's other qualities are that he almost never fails to spot a shyster a mile away, detect insincerity over the telephone or discover a con artist by reading his letter. So if you stop by his shop, leave deceit, subterfuge, superiorty and self aggrandizement at home.

I have personally observed undisputed great men approach and treat Clyde Hart as their own superior. Conversly, I have seen Clyde treat men as his superior who were obviously mediocre local craftsmen. What better measure can we use as a mans true greatness?

Carl U. Lynn,
Past President
International Benchrest Shooters

HODGDON

MODERN SMOKELESS POWDERS

THE FAVORITE OF HANDLOADERS SINCE 1946

H322

RIFLE POWDER

This extruded powder fills the gap between H4198 and BL-C(2), and performs best in small to medium capacity cases. H322 has proved to be capable of producing fine accuracy in the 22 cal and 308 bench-rest guns.

1 lb. can..... $4.95 sugg. retail
8 lb. keg..... $36.95 sugg. retail

NEW DATA MANUAL

New data on Pyrodex and Black Powder.
New section—How to reload for beginners.
New format and calibers.
Information on Rifle, Pistol, Shotgun and Lead Bullet Loads.

NOW AVAILABLE... $4.95
SEE YOUR FIREARMS DEALER

HODGDON POWDER CO.

7710 West 50 Highway Shawnee Mission, Kansas 66202

PRECISION STAYNLESS STEEL MATCH TARGET BARRELS

Blanks in calibers .224, 6mm, 6.5 mm, 7mm and .25 and .30 calibers available.

also .22 rim fire blanks.
For prices and particulars, write:

Hart Rifle Barrels, Inc.

LaFayette, New York 13084, R.D. #2 Telephone Tully, N. Y. Area 315 NX 6-5624

Benchrest Headlines — 25 Years Ago

by A. H. Angerman

- A new Johnstown, N.Y. club house was under construction. The smallbore range in the basement eventually doubled as commercial row space, while the main floor had a dining-banquet room, kitchen, happy hour lounge and comfort station. Commercial rows at bench rest shoots are a thing of the past.
- Phil Teachout, editor of the magazine, made it abundantly clear that competitors were allowed to put up wind flags if they so wished. And they did.
- 35 to 40 MPH winds did not stop twelve Wichita, Kansas shooters from wearing out their barrels. Top names were A. A. Alexander, F. B. Poling, Ted Dick, Earle Auernheimer, Lester Lamb, P. R. Kemmerly and C. H. Denny.
- Joe Marinko from Naugatuck, Conn. built a neatly covered three bench range, but couldn't interest the other 119 members of his Bell City club to sponsor a match.
- Homer Culver announced the availability of his micrometer powder adjustment insert for the Lyman 55 powder measure. He is still making and selling these inserts as of this date!
- How does one shoot in a gusty 50 MPH wind? The answer is "lousy". But 27 guys tried it at Custer, S.D. on May 30-31, 1953 and, give or take a little, managed to agg one minute of angle. Not bad.
- New names were popping up in the Texas-Oklahoma-Kansas bench rest areas. For example, Minnis, Blanchat, Lamb, Dick, Riggs, Dickson, Auston, Neumann and Reed.
- Bullets by Sierra, Hornady or Sisk and barrels by Gregoire, Pride, Apex, Ackley or Buhmiller continued to be used by winning shooters.
- E. L. Phillips was elected Director of the Gulf Coast Region succeeding John I. Moore.
- The Olean, N.Y. club somehow managed ten 5 shot matches for thirty five shooters in one day. There were three relays per match, with an average elapsed time of eleven minutes per relay. A 9:30 a.m. start, half hour lunch, 3:30 p.m. cease fire with agg. scores posted and prizes distributed by 4:00 p.m. has got to be some kind of record. J. Judson, Bruno Borozewski, John Collins, Leon Weld, M. Swort, W. Braun, Joe Rich, L. Reimann, F. P. Keefe and Ralph Brown went home happy.
- Ralph Pride, Cline Deere and Ferris Pindell, all equipped with Swen barrel bedders took Richmond, Ind. on May 24, 1953, while Ralph Brown, Harold Haynam, Leo Denish, Clarence Deem, Harley Brown and Paul Gottschall pocketed all the match money at Augusta, Ohio on June 7.

BENCHREST RIFLE BARRELS
MADE BY
R.G. SHERER
We have Wichita Benchrest and Varminter Actions. Also, Falling Block Works Single-Shot Actions Models J and K — In Stock!
SCHUTZ BROTHERS INC.
P.O. Box 300
North Manchester, Indiana 46962

RELOAD ABILITY

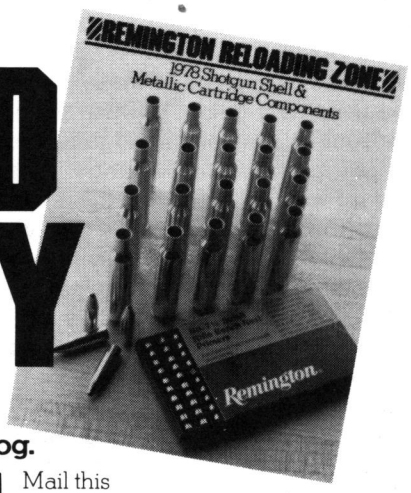

FREE! The 1978 Remington Reloading Components Catalog.

It gives you the latest information on Remington center fire rifle and pistol cases, primers and bullets; shotshell hulls, wads, primers and shot . . . plus exciting news about a new bench rest shooting system.

Available free from your Remington components dealer or from Remington.

Remington. DU PONT

Mail this coupon today for your FREE copy of the 1978 Remington Components catalog. It's loaded with helpful reloading information. Mail to: Remington Arms Company Inc., Reloading Zone, Bridgeport, Conn. 06602

Name _____
Address _____
City _____
State _____ Zip _____

Benchrest Feature

by Lt. Col. Rick Hornbeck
R.D. 2, Box 220
Pine Bush, New York 12566

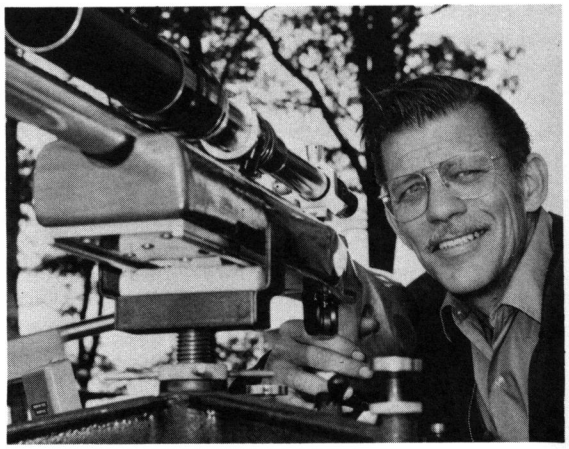

BASIC RELOADING GUIDE

Last month we covered the minimum equipment that is really necessary to reload for the benchrest rifle. We'll now get the very best performance from our rifle with some simple procedures.

First, it's possible that your neck sizing die is giving you more neck sizing than you feel is desirable. If that is the case, contact the gunsmith who did the chambering and ask him to rework the die for you. You might bring this up when you order your rifle. Usually for a small additional charge, he will re-work the die when he builds the rifle.

Select a good match bullet such as those made by Remington, Sierra, Hornady or Nosler. A review of current match results published in these pages can be used as a guide. Powder selection for your caliber and cartridge can be made using the same listings. The amount of powder used by the competitiors, however, must include one additional factor. Those listed may be too hot for your rifle! Consult your reloading manuals and pick a load that is well below maximum. High pressure and velocity are not necessary in all rifles to get best performance.

For example, if you are working with a .222 Remington cartridge and using a 53 grain bullet and 4198 powder, you may see a listing in the results sheet of 20.4 grains. The chamber size, lot of brass and bore diameter are such that the competitor finds this is perfectly safe without excessive pressure. Perhaps you might start with 19.0 grains and work upward carefully.

Make up a dummy round without primer or powder. Polish the bullet or hold a match under the bullet and deposit a thin film of soot on the bullet. Carefully chamber the round and then remove it. See if there is any evidence that the bullet touched the lands. If not pull the bullet, reneck the case, and adjust the seating die so that the over-all round is longer. Check again. When the first evidence of contact is observed, your dummy round is completed. The idea is to just barely get an indication that the lands are making contact with the bullet. Set your seating die with this dummy load and set it aside. You can use the over-all length of this dummy round in the future to check on throat wear. Later, you can make up another dummy round in the same manner. The difference in total length of both rounds is the amount of wear. The wear is best measured with cases that have been fired in the chamber first so that the case fits your chamber perfectly. You might want to fire the first case before making the initial dummy load.

Set up your powder measure, using your powder scale, and reload five or six rounds. We are going to shoot three shot groups. Five shot groups come later. Our objective now is to see if we are at or near a load that gives us good groups, taking into consideration range conditions. Three shot groups will give us good indicators and we can save some money for bullets, powder and primers.

Now, since the barrel is clean, fire one or two sighters, watching conditions with as much care as if you were shooting a record group. Work at it. If you failed to remove all the bore cleaner from the chamber, the first shot will go high; how high depends on how much bore cleaner was left behind in the chamber. That's why you see benchrest competitors wipe the chamber out after cleaning.

Now fire a three shot group. If things are looking good, try another group or two. If not, stop right here. If you are satisfied that it's as good as it's going to get, try some five shot groups. But I'd suggest you press on before settling for the first few groups.

Let's change things and see if we can improve our groups. Never change more than one thing at a time. If the case shows no signs of excessive pressure (and it shouldn't with 19.0 grains of 4198) you might try raising the powder load .3 grain or so. Again, we try several three shot groups. Don't forget to clean that barrel well after ten to fifteen rounds.

We continue on this route, increasing powder amounts slowly until we get the very first indications of pressure. With the .222, .222 Mag and similar cases most of us look for primers that just start to show sights of cratering. Avoid anything that begins to look like the examples of high pressure loads which are pictured in reloading manuals.

With each change in powder record what load was used at each group. If you keep up with recording group data you'll have no trouble selecting the amount of powder that performs best. Set the powder measure to that amount and shoot several five shot groups. Measure these groups and average them. You are ready to go on to the next step.

Some rifles and cartridges are very fussy about seating depth. Others seem to perform perfectly over a rather large range of seating depths. Also, as in the case of the .222, some cases are known to usually perform best at a commonly accepted seating depth. The .222 usually gives best performance just touching the lands, or just short of touching, perhaps three to five thousandth's.

We're now going to try a different seating depth to determine if we can get this rifle to perform better with a different seating depth. We have our dummy cartridge to get back to our first setting if we have to.

When playing with seating depth don't make too large a change. For conventional loading dies, a half turn inward of the seating stem will shorten the loaded round about .025" to .030". That's about the change we're looking for. Turn the seating stem in about one half turn, max-

imum, and then go through the three shot group procedure, recording the groups with the new data. Again adjust the seating stem inward one half turn. You are now .050" to .060" off the lands. At some point, you will probably experience a really big difference, for better or worse. If you have recorded each load and seating depth for each group you'll know what amount of powder, and what seating depth, gives you the best groups. Now start shooting five shot groups and see if it all stands up.

One factor should be kept in mind; as we start jumping the bullet into the lands there is a slight drop in pressure and velocity.

When you have settled on the amount of powder and seating depth, you might want to try another change, like changing primers. This doesn't have much effect with 4198 but some ball powders are very fussy about how they are fired up. This isn't a major factor, just something to keep in mind.

If you change powder or bullet after you have found a good combination you will have to complete the same checks. For example: a change in bullet make might result in a slightly different ogive and some playing around with seating depth will be in order. For rapid results, change only one thing at a time. A change in bullet and powder at the same time will make it difficult to determine if the change was due to bullet or powder.

Take all the targets home & look them over. Count the number of rounds you have fired and record them in a notebook. This procedure will allow you to maintain a log of the number of rounds that have been fired through that custom barrel. Over the coming years, you will gain insight as to how long a custom tube should perform well with certain cartridges and which powders are hardest on barrels. You are not going to learn much in a year or two but, if you maintain your notes, in time you will understand all the factors that control barrel life and rifle performance.

Next month we are going to look into the other tools that are handy and helpful.

WANTED

Advertising and Promotion Manager

Precision Shooting Magazine is seeking someone to fill the position of advertising and promotion manager. If you are an ambitious person who enjoys contacting shooting and sporting oriented businesses and individuals we would like to hear from you.

Space does not allow for a complete description here but we are seeking someone to serve as a contact person in the promotion of Precision Shooting as a valuable source for advertisers who would like to present their products to a group of serious buyers.

We are also seeking to expand the readership of the magazine. Precision Shooting can offer much to the shooters of the world. We find that increasing numbers of shooters would like to subscribe but do not know where to find us. Our promotion manager can help them become aware of our potential.

If you are interested in this position please contact:
Precision Shooting Magazine
Ritchie R. Moorhead, Editor
P.O. Box 6
Athens, PA 18810
or call evenings at 717-888-7801.

FEDERAL CARTRIDGE WORLD RECORD BRASSARD AWARD

The Federal Cartridge World Record brassard award program has been a great success. We are very pleased with your response. During the last 18 months, over 20 of these brassards have been awarded.

As you know, these brassards are awarded only to individuals who have established new world records in benchrest competition. The record must be recognized by the appropriate governing body — IBS or NBRSA — before the brassard can be awarded. Of course, Federal primers and/or cases must have been used in setting the record to qualify for the award. The shooter must have stated the above on his equipment card prior to the match.

In response to shooter requests, Federal has initiated a similar program for the Benchrest Shooters of Canada and for the Sport Shooters Association of Australia. Each program will have its own distinctive brassard which will be awarded to the shooter through their respective organization. Categories of award are: Group, Aggregate, and Grand Aggregate. Shooters must have used Federal primers and/or cases in establishing the new record and have stated so on their equipment card prior to the match.

Shooters qualifying for an award should contact Mike Bussard or their respective organizations.

CUSTOM BULLETS
22 and 6mm
Made in Detsch dies.
for information
contact
Budd Tanner
838 E. Cedar Wapsie Rd.
Waterloo, Iowa 50701

• Masker Micrometer Measure •
My Micrometer Conversion of the Saeco measure lets you return to any setting instantly. Complete Masker Micrometer Measure with stand and quick-detachable unit . . . **$95.00** ppd. Masker Micrometer Conversion of your Saeco measure (send unit) . . . **$48.50** ppd. N.Y. State residents add sales tax. **SEELY MASKER, 261 Washington Ave., Pleasantville, NY 10570** (914) 769-2627

Mirage shields for most target scopes $9.00
EAR Ear Plugs 3 pair $1.50
Benchrest "T" shirts
White $6.00
Colored $7.00
Remington trigger conversions $22.00
Send SASE for information
Saunders Gun & Machine
145 Delhi Rd.
Machester, Iowa 52057

IBS Registered Hunter Rifle Match
Saginaw Field and Stream Club
Saginaw, Mi., May 6, 1978

Name	Score	Cal.	Rifle	Scope	Bullet	Load	Case	Primer
Hunter								
1. Herzog, E. Saginaw, Mi.	235-OX	222	Rem 700/ Rem.	Leupold 3-9	Sierra	19 gr. 4198	Rem.	Win.
*2. Wright, R. Saginaw, Mi.	232-3X	222	Shilen DGA/ Shilen	Lyman 6X	Rem.	24.5 gr. 4895	Rem.	Rem. 7-1/2
Marksman								
1. Wright, R. Saginaw, Mi.	209-1X	243	Rem 700/ Federal	Lyman 6SL	Nosler 70	40.2 gr. 3031	Rem.	CCI
Factory								
1. Carter, R. Gibralter, Mi.	187-OX	6MM	Rem 788	Redfield 3-9	Sierra	39.5 gr. 4064	Win.	Rem. 9-1/2
*Won Warm-Up Match with 48-OX.								
Unregistered Sporter								
*1. Schopp, T. Saginaw, Mi.	.439	6X47	Rem. 700 Slv/ Hart	Lyman 20X	Own 70 FB	28.5 gr. 748	Fed.	Fed. 205M
2. Konowich, E. Flushing, Mi.	.489	6X47	Rem. XP-100/ Hart	Lyman/Sie. 30X	Sierra 70	27.5 gr. 748	Fed.	Rem. 7-1/2
*Won Warm-Up Match with .437.								

Bad weather and Saturday overtime kept many shooters away from the first shoot of the season. Hope to see more shooters out next time. Elmer Herzog made a fine showing for his first shoot, winning a Redding No. 3 powder measure. Other prizes awarded included a rear bag and a pair of B&L rings.

Thanks to all who came. See you at the next shoot.

Tom Schopp, Reporter

PRECISION RIFLES & RELATED PRODUCTS
Complete full time operation

SINCLAIR, INC.

1200 Asbury Dr. — Box 302
New Haven, Ind. 46774 - (219-493-1858)

NEW SAFETY GLASSES FOR SHOOTERS!

Rugged new lens gives you unparalleled clarity, yet is virtually unbreakable and won't scratch*!

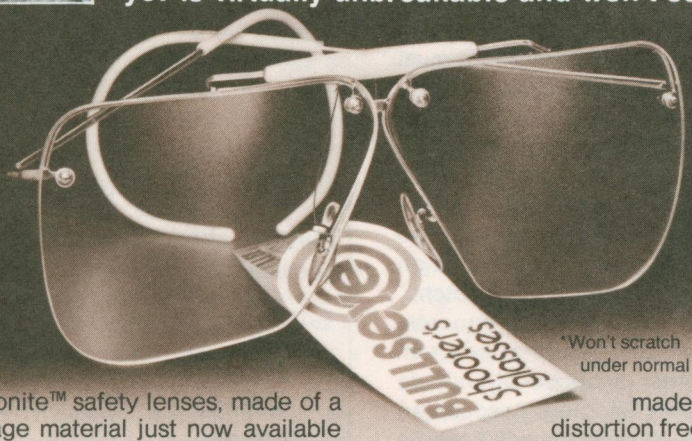

*Won't scratch under normal use.

Hudsonite™ safety lenses, made of a spaceage material just now available to the shooting optics industry, are ½ the weight of glass, resist scratching, and are *virtually unbreakable*. Semi-rimless construction eliminates glare and frame interference. High relief design with adjustable bridge keeps glasses high. Plastic tipped earpieces give comfortable, secure fit.

Whether you're a target, benchrest, skeet or trap shooter, law enforcement officer or hunter, you'll shoot truer, safer, with these fine American-made, full field, distortion free glasses. Available in six colors with handsome reinforced carrying case. Dealers inquire.

40 Years of Sight Saving

HUDSON Sporting Optics

842 Broadway, Dept. PS
New York, New York 10003
©Copyright 1978, Hudson Optical Corporation

TRADING POST

Groups of figures, abbreviations and initials count as words. Hyphenated word counts as two words. Name and address of advertiser is counted. Use full words instead of initials and abbreviations and make your meaning entirely clear.

Classified type ads: no display. **Rates:**— 10c per word per insertion, prepaid. Minimum charge $1.00. Closing date for ads is the last Saturday of the month preceding publication.

REMINGTON XB BR .222 caliber, 26 inch stainless steel barrel, 2 oz. trigger, never loaded, latest model. $425.00. Nelson McKenzie, 1127 Tremony St., Duxbury, Ma. 02332. 617-934-5318.

SHILEN DGA, 22-250, laminated stock, SST barrel, in excellent condition, includes hard case, shilen sizing die and new Weaver T-16 scope. $575.00 or best offer. Will separate. Jim Radcliff, 1408 E. State, Marshalltown, Iowa, 50158. 515-752-2290.

FOR SALE Redfield 6400, Receiver Mounted 20X, Fine Cross Hairs. Like new $125.00.
LYMAN-SIEBERT 30X Older AA LWBR w/o knobs. Excellent condition $150.00. Consider trades on custom loading tools, Arbor Press, Pedestal, Primer Seater, etc. R. F. Fisher, Rt. 2, Box 2188, Hamilton, Mt. 59840. Cert Ck or MO.

FOR SALE Lyman Super Targetspot 15 like new $110. Lawrence Lapinske, PO Box 1024, Wausau Wis.

FOR SALE: 6 BR Remington cases formed in RCBS dies from the new Remington BR case. Box of twenty $7.00 plus .50 postage. Ed Longo, 111 N. Hyde Park Ave. Scranton, Pa. 18504. Out of state to FFL holders only.

Sulphyr Springs Rifle and Revolver Club Inc.
Unregistered Varmint Match May 7, 1978

Name	Score	Cal.	Rifle	Scope	Bullet	Load	Case	Primer
1. Vince Pastorolla	250-13x							
2. William Theis	249-16x	222	XP100 Hart	Lyman	Detseit BT52	20gr. 4198	Fed.	Fed.
3. Randy Fritz	249-10x	222	Hart Hart	Leupold	Sierra 52	27gr. 748	Rem.	F205
4. James Zeyn	248-7x	6x47	700slu Hart	Lyman	HPBT 70	29gr. 748		Fed.
5. Nathen Boop	248-7x	222	40x Hart	Leupold	Rem. HP. 52	21.2gr. 4198	Fed.	Rem.
6. Ray Mitch	248-7x	6MM	40xbr Rem.	Leupold	Detsch	29gr. 201	Sako	Rem.
7. Guy Green	247-4x	222Mag.	Rem.40x	Unertl	B&A 55	27gr. 748	Rem.	Rem. 7-1/2
8. Larry Hanselman	241-4x	222	XP100 Rem.	Leupold	Rem. 52	21gr. 4198	Fed.	
9. William Greasy	239-4x	22-250	Rem.	Lyman	Sierra 52	35.5gr. 4064		
10. Carl Ney	233-2x	6MM	Rem. 700 Shilen	Redfield	Win. 85	35gr. 4895	Rem.	Fed.

Sulphyr Springs Rifle and Revolver Club Inc.
Hunter and Varmint Match May 7, 1978

Master Class

Name	Score	Cal.	Rifle	Scope	Bullet	Load	Case	Primer
1. Vince Pastorella	247-11x	308	Rem. Hart	Lyman	Sierra 168	41gr. 4895	Fed.	Fed.
2. Marion Neuhard	246-12x	308	Rem. Douglas	Lyman	Sierra 168	40gr. 4064	Fed.	Fed.
3. Edward Gates	246-10x	243	Rem.722 Hart	Leupold	Rem.	39gr. 4831	RP.	215
4. Roger Gower	245-9x	308	Rem. Atksn	Weaver	McCracken 168	39.5gr. 4895	Fed.	Fed.
5. William Theis	244-5x	6x47	Rem. Hart	Lyman	Sierra BT70	26.5gr 4895	Fed.	Fed.
6. Gerald Voorhees	244-3x	308	Rem. Hart	Lyman	Sierra	39gr. 4064	Fed.	Fed.
7. Paul Olewine	244-3x	6x47	Rem.700	Leupold				
8. Guy Green	243-10x	308	Rem.722 Douglas	Pecar	Sierra 168	38gr. 4064	RA60	Alcan
9. Paul Thompson	243-8x	308	Rem. Hart	Weaver	Sierra 168	40gr. 4064	GI.	Fed.
10. Conrad Eckrote	242-9x	308	Rem.700 Hart	Lyman	Own 168	38.5gr. 3031	Fed.	Fed.
11. Russ Perry	242-6x	308	Rem. Shilen	Lyman	168	38gr. 3031	Win.	Rem.
12. Carl Lynn	240-4x	6x47	Rem.700 Hart	Lyman	Own 70	38gr. 4895	Rem.	Rem. 7-1/2
13. Randall Fritz	234-3x	308	Rem. Hart	Lyman	Sierra 168	39gr. 4064	LC	Fed.
14. Randy Fritz	223-2x	308	Rem.722 Hart	Lyman	Sierra 168	39.5gr. 4064	Fed.	F210

Hunter Class

1. Robin Fritz	248-11	308	Rem.	Redfield	Sierra 168	40.5 4064	Fed.	F210
2. Bill Gebhardt	241-6x	308	Rem.	Lyman	Sierra 168	40.5gr. 4064	Fed.	F210
3. Agnes Sabo	237-8x	308	Rem. Hart	Lyman	Sierra 168	39gr. 4895	Fed.	Fed.
4. Ronald Palmer	224-3x	308	Rem.	Lyman	Sierra 168	41.5gr. 4064	Fed.	Fed.

Marksman

1. Susie Fritz	241-3x	6x47	Rem.722 Hart	Leupold	Sierra 70	33.5 No.7	Rem.	Rem.7-1/2
2. Richard Hons	232-1x	22-250	Rem.700	Weaver	APBT 52	37.5gr. 760	Win.	Win.
3. Jeanne Lynn	212-2x	243	Rem.700	Lyman	Own 70	39gr. 760	Rem.	Rem.9-1/2

BLUING STAINLESS STEEL
complete riflesmith
services brochure 25 cents
J. Korzinek, Riflesmith
RD 2, Canton, Pa. 17724

GTB BENCHREST BULLETS
22cal 6mm 30cal
Send stamp addr. envelope for info to:
Bob Cauterucio
482 Comerwood Ct. So. S.F. Ca. 94080

Bob Pease ACCURACY
Benchrest Equipment
Send 24 cent stamped envelop for 12 pg. brochure and listing for 40-XB and XBR's available for immediate delivery.
P.O. Box 787P
New Braunfels, TX. 78130

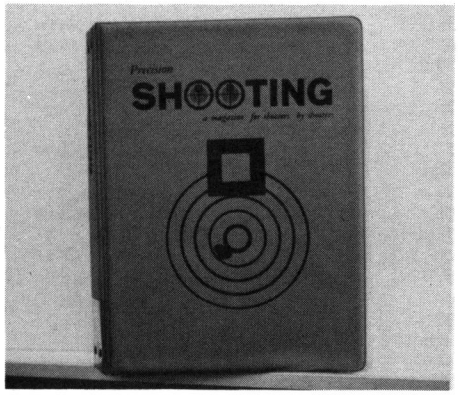

PRECISION SHOOTING BINDER

Precision Shooting Magazine has the perfect answer for the problem of storing the back issues that you are saving so carefully.

A Precision Shooting binder will hold a complete year of either the old size (pre March 1973) or the new size magazine. This binder, with an attractive small group printed on the cover, is available for your use. The vinyl binder is shipped in a cardboard cover and is complete with wires to hold the issues in place. **Now available in red and green.**

To order your binders send $5.50 ppd. each to Precision Shooting, Box 6 Athens, Pa. 18810. $5.00 at a match.

IBS REGISTERED SHOOT REPORT
Virginia State Championship
Stonewall Rifle and Pistol Club
Stanton, Virginia
April 15 & 16, 1978

The following shoot report reflects the first activity from this fine club in some time. One of the pillars of early benchrest activity the club fell dormant and only recently rebuilt and began shooting seriously once more. We were all glad to hear of their return.

Although the weather did not cooperate, temperatures in the teens and low twenty's, and there were some disqualifications, both by the referees and by mother nature, the match went well. Those in attendance indicated that it was a fine match and they would like to try it when it was not so cold.

We had planned on making the trip but some personal business intervened at the last minute. Maybe next time we will make it. The shoot report is presented for your enjoyment.

R.R.M.

100 yard match winners.
Light Varmint

Match 1
1. P. Smith ..... .282
2. R.E. Anderson ..... .308

Match 2
1. W. Hudson ..... .214
2. T.L. Manning ..... .290

Match 3
1. P. Smith ..... .260
2. D. E. Patton ..... .320

Match 4
1. P. Smith ..... .247
2. J.C. Chrisman ..... .438

Match 5
1. P. Smith ..... .331
2. C.L. Thompson Jr. ..... .364

Heavy Varmint

Match 1
1. P. Smith ..... .189
2. A. H. Angerman ..... .271

Match 2
1. D. H. Jones ..... .203
2. R. E. Anderson ..... .222

Match 3
1. A. Blensinger ..... .237
2. A. H. Angerman ..... .300

Match 4
1. W. K. Theis ..... .330
2. A.H. Angerman ..... .361

Match 5
1. H. L. Culver ..... .286
2. W. K. Theis ..... .315

200 yard match winners.
Light Varmint

Match 1
1. W. K. Theis ..... .662
2. J. B. Davidson ..... .754

Match 2
1. M. Hudson ..... .966
2. R. E. Anderson 1.183

Match 3
1. W. Hudson ..... .966
2. T. L. Manning 1.127

Match 4
1. A. Blensinger ..... .485
2. H. K. Wright ..... .561

Match 5
1. R. E. Anderson ..... .760
2. P. Smith ..... .784

Heavy Varmint

Match 1
1. R. De Monstoy ..... .544
2. H. L. Culver ..... .876

WICHITA'S SUPERIOR BENCHREST ACTIONS

THE WICHITA MINI-ACTION
Perfect for the 10½ pound classes
- Receiver 1.375" in dia. - 5.5" long
- Shell holder bolt face
- 1 lb. 13 oz.

$180.00 plus postage

THE WICHITA WBR 1375
- Receiver 1.375" in dia. — 8.5" long
- Phosphor bronze extractor
- 2 lb. 10 oz.
- Opposite-side ports available in right hand or left hand model 1375's

$250.00 plus postage

Both actions finished in non-glare satin black. Bolts feature 3 locking lug-design. Suitable for Canjar or Remington triggers. Barrel thread size - 1" 16 NF - 3 X 1" deep.

A Pair of Precision Rifle Rests
Cast aluminum and steel . . . 6 lbs **$39.95**
Cast iron and steel . . . 11 lbs **$49.95**

For more information, see your local dealer, or write Wichita

Wichita also offers Return to Battery Rests for "BIG GUNS"

WICHITA ENGINEERING & SUPPLY INC.
DEPT. PS 7 P.O. BOX 11371 WICHITA, KANSAS 67211 PHONE (316) 265-0661

Firearm Refinishing Unit
for Pleasure or Profit

For the best in firearm refinishing, Heatbath offers you the very same process used by manufacturers in finishing guns and small parts. The Gunsmith Unit comes complete with tanks, burners and a supply of Pentrate® crystals (a patented superior "blueing" material for steel) and all equipment needed. You'll be proud of the appearance of your guns . . . and you can also make handsome profits refinishing weapons for friends.

Write for full details.
HEATBATH CORPORATION
P.O. Box 2978, Springfield, Ma. 01101

Equipment List for Virginia State Championship

Competitor's Equipment — Light Varmint

No.	Name	Cal.	Action	Scope	Barrel	Gunsmith	Stocker	Load	Bullet
1.	Pete Smith	6x47	Rem	Leupold	Hart	Self	Self	30 748	Watson 52.5
2.	William Theis	222	XP100	Leupold	Hart	Cole	Cole	20 4198	Detsch 52
3.	Wayne Hudson	6x47	Rem	Lyman	Rem	Rem	Manning	24.5 R7	Hudson 62
4.	Art Blensinger	6PPC	Rem 660	Lyman	Hart	Kempfer	Kempfer	28 H322	Detsch 70
5.	Robert Anderson	6PPC	XP100	Leupold	A&M	Pindell	Manning	29.5 748	Manning 68
6.	Ted Manning	6x47	XP100	Leupold	Sherer	Self	Self	24 R7	Manning 68
7.	Dave Patton	6PPC	40X	Lym/Sieb	——	Pindell	Self	28 H322	Manning 62.5
8.	Homer Culver	22C	Culver	Lyman	Hart	Self	Self	26.5 3031	Culver 52
9.	Kerry Butler	6x47	Wichita	Leupold	Hart	Hart	Hart	29 748	Metzer 70
10.	Bob DeMonstoy	6PPC	Rem	Lyman	Hart	Masker	Masker	28 H322	Obrockta 70

Competitors Equipment — Heavy Varmint

No.	Name	Cal.	Action	Scope	Barrel	Gunsmith	Stocker	Load	Bullet
1.	Art Blensinger	6PPC	40X	Lyman	Hart	Kempfer	Kempfer	28 H322	Detsch 70
2.	Homer Culver	308	Hus-Var	Lyman	Hart	Culver	Culver	40 R11	Culver 160
3.	A.H. Angerman	222	Rem/Slv	Leupold	Hart	Hart	Self	20.5 4198	Angerman 52
4.	Kerry Butler	308	Hart	Lym/Sie	Hart	Fielding	Fielding	42 4895	Sierra 168
5.	Donald Jones	222	Rem	Redfld	Shilen	Shilen	Shilen	26 748	Rem 52
6.	Bob DeMonstoy	6MM	Rem	Lyman	Hart	Masker	Masker	28 H322	Obrockta 70
7.	Robert Anderson	6PPC	XP100	Leupold	A&M	Pindell	Manning	29.5 748	Manning 68
8.	Dave Patton	6PPC	40X	Lym/Sie	—	Pindell	Self	28 H322	Manning 62.5
9.	Ted Manning	6PPC	XP100	Leupold	Hart	Sinclair	Self	30 748	Manning 68
10.	Pete Smith	222	Shilen	Leupold	Shilen	Shilen	Self	24 4895	Rem 52

Match 2

1. H. L. Culver ..... .536
2. W. K. Theis ..... .648

Match 3

1. J. C. Chrisman ..... .949
2. D. E. Patton 1.030

Match 4

1. W. Fielding ..... .771
2. D. H. Jones ..... .871

Match 5

1. Jack Pond ..... .843
2. K. Butler ..... .871

The Aggregate and Grand Aggregate winners for Light Varmint were:

100 yard

1. P. Smith ..... .318
2. W. Hudson ..... .497
3. D. E. Patton ..... .529

200 yard

1. W. K. Theis ..... .5554
2. T. L. Manning ..... .6242
3. A. Blensinger ..... .6478

Grand Aggregate

1. P. Smith ..... .5019
2. W. K. Theis ..... .585
3. W. Hudson ..... .594
4. A. Blensinger ..... .6054
5. R. Anderson ..... .6136
6. T. Manning ..... .6261
7. D. Patton ..... .6291
8. H. Culver ..... .6353
9. K. Butler ..... .7030
10. R. De Monstoy ..... .7370

Small Groups

100 yard

W. Hudson ..... .214

200 yard

A. Blensinger ..... .485

The Aggregate and Grand Aggregate winners for Heavy Varmint were:

100 yard

1. J. C. Chrisman ..... .369
2. A. Blensinger ..... .414
3. D. H. Jones ..... .430

200 yard

1. W. Fielding ..... .5421
2. H. L. Culver ..... .5725
3. D. E. Patton ..... .5949

Grand Aggregate

1. A. Blensinger ..... .5082
2. H. L. Culver ..... .5288
3. A. H. Angerman ..... .592
4. K. Butler ..... .597
5. D. Jones ..... .6083
6. R. De Monstoy ..... .6198
7. R. Anderson ..... .6476
8. D. Patton ..... .6540
9. T. Manning ..... .6560
10. P. Smith ..... .7135

Small Groups

100 yard

P. Smith ..... .189

200 yard

H.L. Culver ..... .536

The 2 Gun Aggregate winners were:

1. A. Blensinger ..... .5520
2. H. L. Culver ..... .5820
3. P. Smith ..... .6077
4. R. E. Anderson ..... .6306
5. T. Manning ..... .6410
6. D. Patton ..... .6415
7. K. Butler ..... .6500
8. W. Hudson ..... .6678
9. R. De Monstoy ..... .6769
10. M. Hudson ..... .9655

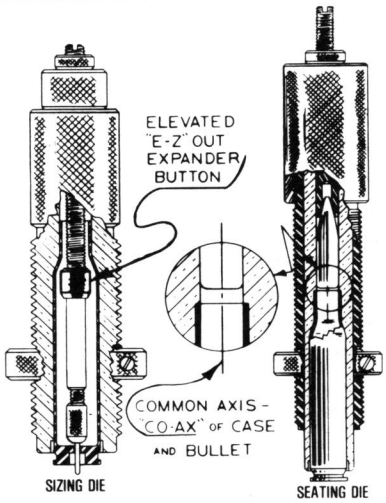

BONANZA BENCH REST RELOADING DIES

Bonanza Dies represent the first improvement in design since 1924. Eleven claims were allowed by the U. S. Patent Office. The sizer (Fig. 1) has an ELEVATED, glass-hard expander which is drawn through the case neck during the machine's greatest mechanical advantage and requires only finger tip effort. Since most of the cartridge neck is still in the sizer when expanding is started, better alignment of case and neck are obtained.

The Bench Rest Seating Die (Fig. 2) has a sliding sleeve in which the case is held all the way home in a tight fitting chamber. The bullet is also held in a tight fitting channel. Both case and bullet are held in close alignment ALL THE WHILE THE BULLET IS BEING SEATED. These dies are usable on any ⅞x14 press, yet cost no more than some straight line hand seaters alone. At $18.95 they are the reloader's best value. Why not order out a set today? Satisfaction guaranteed.

NEW! NEW!
NOW AVAILABLE FOR THE ALL NEW REMINGTON .22 AND 6MM BENCH REST CARTRIDGES, CHOICE OF FULL LENGTH OR NECK SIZER.

"SEE YOUR DEALER FIRST"

Please drop us a note for your FREE copy of Bonanza All Product Catalog

BONANZA SPORTS MFG. CO.
RELOADING DIVISION
412-6 WESTERN AVENUE • FARIBAULT, MINNESOTA 55021

UNREGISTERED SHOOT REPORT
MILLPORT, PA.
Millport Saturday Night Shooters

Following are the results of the winter league held by "The Millport Saturday Night Shooters". The club wishes to thank all the shooters who participated. A special thanks to those who changed targets and scored them.

Jan. 15

Match 1

1. D. Beaver ..... .328
2. C. Gamble ..... .405
3. R. Maxson ..... .251
4. E. Hanes ..... .232
5. D. Beaver ..... .235
6. J. Aber ..... .230

Aggregate

1. C. Gamble ..... .3296
2. P. De Monstoy ..... .4370
3. D. Beaver ..... .4584
4. P. Phillips ..... .4820
5. M. Gamble ..... .4878
6. Mills ..... .4914
7. Lockwood ..... .4936

Jan. 29 — 26 Shooters

Match 2

1. C. Detsch ..... .195
2. J. Decker ..... .318
3. T. Gardner ..... .207
4. E. Hanes ..... .252
5. J. Horton ..... .347
6. E. Hanes ..... .222

L OPTICS

Tel: 1(203)872-4758
15 Laurel Ridge Road
- Tolland, Ct. 06084

FOR THE MOST DISCRIMINATING SPORTSMEN AT **DISCOUNT PRICES**

We stock the following scopes. Leupold, Lyman, Redfield.
30% off and more on all optical equipment.

Leupold

M8-24X* TARGET SCOPE

10 X A.O.	$106.10	20 X A.O.	156.60
12 X A.O.	110.05	24 X A.O.	154.45
16 X A.O.	156.60		

Lyman

Silhouette Scopes		Benchrest Scopes	
6 X SL	$106.69	20 X L.W.B.R.	166.47
8 X SL	113.16	25 X L.W.B.R.	173.39
10 X SL	120.03	Dot reticle add $12.00	

Redfield

Metallic Silhouette		Target Scopes	
3 X 9 X MS	125.15	6400	$175.55
6 X MS	84.25	3200	176.75
8 X MS	111.40	**Spotting Scopes**	
12 X MS	118.80	15 X 60 X Std.	$166.25
		15 X 45 X Std.	135.10

Connecticut residents add 7% Sales Tax. Prices subject to change without notice. Send Certified check or money order.

Prepaid Shipments C.O.D.'s Accepted
Send for complete price list.

Aggregate

1. E. Hanes ..... .3362
2. C Detsch ..... .3438
3. T. Gardner ..... .3468
4. W. Testani ..... .3810
5. C. Gamble ..... .3850
6. J. Decker ..... .4036
7. F. Obrocta ..... .4584

Feb. 12 — 25 Shooters

Match 3

1. C. Detsch ..... .318
2. R. Lockwood ..... .241
3. P. Phillips ..... .316
4. E. Hanes ..... .293
5. E. Hanes ..... .243
6. R. De Monstoy ..... .277

Aggregate

1. R. De Monstoy ..... .4012
2. C. Detsch ..... .4114
3. T. Gardner ..... .4304
4. Olson ..... .4422
5. Lockwood ..... .4434
6. J. Decker ..... .4498

Feb. 26 — 30 Shooters

Match 4

1. Mc Connell ..... .192
2. T. Gardner ..... .212
3. J. Decker ..... .282
4. F. Horton ..... .175
5. Olson ..... .300
6. C. Gamble ..... .287

Aggregate

1. C. Gamble ..... .3198
2. T. Gardner ..... .3396
3. E. Hanes ..... .3498
4. M. Gamble ..... .3610
5. B. Brawand ..... .3848
6. R. De Monstoy ..... .3854
7. P. Phillips ..... .3952

March 12 — 31 Shooters

Match 5

1. C. Gamble ..... .185
2. R. De Monstoy ..... .172
3. C. Gamble ..... .240
4. Olson ..... .156
5. P. Phillips ..... .251
6. B. Mc Connell ..... .178

Aggregate

1. C. Gamble ..... .2506
2. B. Mc Connell ..... .2910
3. T. Gardner ..... .3028
4. E. Decker ..... .3152
5. R. De Monstoy ..... .3296
6. Olson ..... .3310
7. M. Gamble ..... .3324

March 26 — 24 Shooters

Match 6

1. F. Horton ..... .332
2. F. Kurtz ..... .251
3. J. Decker ..... .282
4. R. De Monstoy ..... .284
5. J. Decker ..... .265
6. E. Decker ..... .240

Aggregate

1. F. Horton ..... .3696
2. E. Decker ..... .3724
3. Lockwood ..... .4088
4. C Gamble ..... .4096
5. R. Maxson ..... .4136
6. J. Decker ..... .4282

April 9 — 32 Shooters

Match 7

1. De Monstoy ..... .318
2. J. Decker ..... .183
3. M. Gamble Jr. ..... .243
4. E. Hanes ..... .142
5. Mills ..... .222
6. Mills ..... .232

Aggregate

1. Fred Horton ..... .2726
2. J. Decker ..... .3326
3. Mills ..... .3514
4. C. Detsch ..... .3734
5. De Monstoy ..... .3842
6. M. Gamble Sr. ..... .3862
7. E. Decker ..... .3994

April 23 — 29 Shooters

Match 8

1. P. Kempfer ..... .169
2. C. Detsch ..... .221
3. B. Brawand ..... .198
4. C. Detsch ..... .118
5. R. Moorhead ..... .303
6. P. Kempfer ..... .200

Aggregate

1. C. Detsch ..... .2876
2. R. De Monstoy ..... .3076
3. P. Kempfer ..... .3214
4. B. Brawand ..... .3440
5. M. Gamble ..... .3448
6. Mills ..... .3528
7. B. Testani ..... .3582

Grand Aggregate

1. C. Gamble ..... .3331
2. C. Detsch ..... .3552
3. R. De Monstoy ..... .3616
4. T. Gardner ..... .3748
5. E. Decker ..... .3784
6. M. Gamble ..... .3814
7. F. Horton ..... .3840
8. B. Brawand ..... .3874
9. E. Hanes ..... .3954
10. Mills ..... .4013

Smallest Group

C. Detsch ..... .118

Smallest Aggregate

C. Gamble ..... .2506

Trophies were presented to all these winners.

"The Millport Saturday Night Shooters" will continue to shoot every other Sunday. Shooting will start at 1 p.m.

Equipment List for Dunham's Bay
Registered Match of April 23, 1978

Conditions — Bright, sunny, warm, very windy.

Competitor	Cal.		Action	Scope	Barrel	Gunsmith	Stocker	Load	Bullet	Primer
1. Lou Church	.3570	6 PPC	Shilen	Leup. 24X	Hart	Butler	Butler	30.0 N201	Euber 68	Fed. 205
2. Allie Euber	.3650	6 PPC	600 Slv.	Ly. Sieb 32X	Hart	Butler	Self	29.5 N201	Euber 68	Fed. 205
3. Dick LeFebvre	.4424	6 PPC	700 Slv.	Ly. Sieb 25X	Hart	Farnsworth	Hart	28.8 4895	Detsch 70	Fed. 205
4. Erwin Elithorpe	.4442	6 PPC	Rem.	Lyman 20X	Hart	Butler	Boise	30.0 N201	Euber 68	Fed. 205
5. George Jackson	.4478	6 PPC	Rem. 40X	Ly. Sieb 25X	Hart	Butler	Butler	29.0 H322	Euber 68	Fed. 205
6. Lee Euber	.5278	6 PPC	Rem. 40X	Ly. Sieb 30X	Hart	Butler	Euber	30.0 N201	Euber 68	Fed. 205
7. Norm St. Pierre	.5698	222	Rem. Slv.	Lyman 20X	Hart	Boise	Boise	25.9 748	Rem. 52	Fed. 205
8. George Foster	.5786	6X47	Rem. 700	Ly. Sieb 24X	Sherer	Jim Meyer	Meyer	24.3 RL-7	Sierra 70	Rem. 7.5
9. Gordy Euber	.5864	22PPC	Rem. 40X	Ly. Sieb 30X	Hart	Butler	Butler	28.0 H4895	Dixon 51	Fed. 205
10. Robin Knapp	.5880	222	Rem. 40X	Redfield 24X	Hart	Hart	Hart	20.2 4198	Dixon 51	Fed. 205

Lou Church hung in at the end to beat out Allie Euber today, but Allie moved into first place in the run for Club Champion. His aggregate is now .3325, compared to .2607 at this time last year, which will give those of you who haven't been here an idea of what conditions have been like this year. The only one left with much of a chance to beat out Allie is Tom Boise. Tom would have to fire about a .3250 while Allie can try to better his biggest aggregate of .3846. Hope Tom will be able to fire the last match on May 7th, just to keep Allie working.

Final Standings of Dunham's Bay Winter League 1978

1. Allie Euber	.2774	.2898	.3084	.3458	.3650	.3173
2. Tom Boise	.2676	.3010	.3772	.3904	.3950	.3462
3. Lee Euber	.3246	.3348	.3528	.3718	.3862	.3540
4. Eli Elithorpe	.3066	.3310	.3724	.3778	.3846	.3545
5. Bob Reid	.2880	.3324	.3504	.4072	.4150	.3586
6. Dick LeFebvre	.3274	.3856	.3902	.4148	.4424	.3921
7. Gordy Euber	.3348	.3892	.4056	.4074	.4308	.3936
8. Lou Church	.3546	3570	.3932	.4114	.4570	.3946
9. Fran Williams	.3610	.3718	.3896	.4190	.4558	.3994
10. George Jackson	.3178	.3378	.4140	.4478	.5594	.4154
11. Joe Winters	.3280	.3942	.4406	.4636	.4766	.4206
12. Norm St. Pierre	.4038	.4182	.4688	.4782	.4862	.4510
13. Joe Vinci	.3576	.4022	.4088	.4294	.7078	.4612
14. Ira Farnsworth	.3208	.4230	.4642	.5038	.6136	.4651
15. Myles Hollister	.3158	.4004	.4222	.5948	.6056	.4678
16. Art Loftus	.3684	.3924	.4162	.5900	.6126	.4759
17. Jim Robinson	.3856	.6456	.7196	.7724	.9742	.6995

Smallest group of the season Gordy Euber .105

1. Ira Farnsworth	249-12	245-12	245-5	242-3	241-5	1222-37X
2. Norm St. Pierre	250-9	249-14	245-7	238-7	238-7	1220-44X
3. Ernie Willson	243-6	242-7	241-6	236-4	228-5	1190-28X
4. Ron Farnsworth	248-6	245-6	231-3	227-2	226-2	1177-19X

And so another season ends, yet another begins. Congratulations to Allie and Ira on their accomplishments!

Didn't know how much I was missing, not shooting for the past four months, but with five consecutive four and one groups, feel that I'm in mid-season form already.

Charles Fountaine, Reporter

Custom Products
NEIL A. JONES

686 BALDWIN STREET
MEADVILLE, PA 16335

Rem. 600 steel floor plate and trigger guard.

48" Cleaning rod sets.

Micrometer conversion for Lyman 55 powder measure, Guaranteed within .001 repeatability.

Pill bottle adaptor-baffle

Depriming Tools.

Floating Neck Sizing Dies.

Send S.A.S.E. for brochure.

FOR SALE
BULLET SWAGE DIES

A picture of a set of bullet swage dies looks almost exactly like a picture of a set of reloading dies, especially a small picture like I might show here. Also, they work pretty much the same. They screw into the press like reloading dies and the punches fit into the ram much the same as shell holders. So there doesn't seem much use in showing a picture. It would take most of the pages in this paper to completely explain bullet swaging which I certainly can't afford. So let's make a deal. You send me $2.50 to cover packaging and handling and I'll send you a set of bullet swage dies to make full jacketed open point 22 caliber rifle bullets. I'll send you enough lead and precision jackets to make your first one hundred bullets. I'll bill you for just $27.50. You make up the hundred bullets and shoot them. If they don't outshoot the bullets you are now using just return the dies only for full credit, no questions asked. In case you're interested I have made more bullet swage dies than anyone in the world, and I still do. Just include the two fifty and say 'send me some dies'.

Shooters Accessory Supply,
3091 N. Bay Drive,
North Bend, Oregon. 97459

Adjustable Shooting Stools

Solid Oak
Cadmium Plated Hardware
$24.50 plus postage

NJ residents include 5% sales tax.

Tony Hidalgo
6 Capp St.
Carteret, NJ 07008
201-541-5894
Quantity discount available

South Creek
Rod & Gun Club
Unregistered Shoot Report
April 30, 1978

Match 8 and final aggregate (best 5).

Aggregate winners

1. Paul Lloyd ..... .4630
2. Jack Deming ..... .4888
3. Paul Kempfer ..... .5166
4. Mike Griffin ..... .5558
5. Bill Theis ..... .5584

Match 1

1. Jerry Guilds ..... .328
2. Mike Griffin ..... .337
3. Floyd Stohner ..... .341
4. Jeanne Lynn ..... .350

Match 2

1. Stan Bonbaski ..... .232
2. Bob DeMonstoy ..... .267
3. Mike Griffin ..... .315
4. Jerry Guilds ..... .323

Match 3

1. Paul Lloyd ..... .280
2. Bill Theis ..... .344
3. Paul Kempfer ..... .370
4. Mike Williams ..... .371

Match 4

1. Clyde Hart ..... .336
2. Bill Theis ..... .337
3. Jack Deming ..... .347
4. Paul Lloyd ..... .365

Match 5

1. Carl Lynn ..... .404
2. Ritchie Moorhead ..... .422
3. Ed Joiner ..... .430
4. Dave Bendick ..... .455

Junior Aggregate Winner (best 5).

Thomas Kauffman ..... .6118

Top Ten Aggregate Winners (best 5).

1. Jack Deming ..... .4370
2. Ritchie Moorhead ..... .4504
3. Clyde Hart ..... .4510
4. Lloyd Richards ..... .4570
5. Jerry Guilds ..... .4616
6. Bill Theis ..... .4738
7. Stan Bombaski ..... .4782
8. Paul Olewine ..... .4904
9. George Stickler ..... .4976
10. Art Blensinger ..... .4980

George Stickler
Reporter

SOUTH CREEK ROD AND GUN CLUB
R.D. 2, Gillett, Pa.

200 Yard Unregistered Score Shoot
May 7, 1978

Place	Competitor	Score
1.	Clarence Detsch	247-12X
2.	Art Blensinger	246-8X
3.	Tim Ford	245-7X
4.	Mike Griffin	244-5X
5.	Lloyd Richards	243-7X
6.	Stanley Bombaski	241-7X
7.	Paul Phillips	241-3X
8.	Don McIlwain, Jr.	240-8X
9.	George Stickler	240-7X
10.	Frank James	240-5X
11.	George Leasure	240-2X
12.	Frank Obrochta	239-3X
13.	Don McIlwain	236-4X
14.	Dave Hoyt	235-3X
15.	Ed Carolin	234-5X
16.	Jerry Guilds	234-3X
17.	Tom Kaufmann	233-2X
18.	Paul Kempfer	232-4X
19.	Jack Kenyon	232
20.	Ray Wilson	229-3X
21.	Lynn Congdon	229-3X
22.	John Moulthrop	225-1X
23.	Paul Lloyd	200

Unregistered Bench Rest Tournament
Capitol City Rifle & Pistol Club,
Augusta, Maine May 14, 1978

Master	**Hunter—10 lbs.**	**Hunting Rifle—9 lbs**
N. St. Pierre	247-8x Winner	87-1x
J. Gilbert	246-11x 1st	92-2x 1st
C. Rittall	246-6x	95-3x Winner
D. Caruso	244-6x	DNF
M. Torpacka	235-2x	92-1x
Hunter		
H. Curry	246-4x 1st	90-2x
J. Lynds	235-4x	91-1x 1st
R. Veilleux	232-10x	77
A. Garcelon	208-4x	86-1x
Marksman		
S. Miller	223-2x 1st	DNF
S. Graf	206-3x	94-1x 1st
W. Blick	201	DNF
W. Carter	DNF	53

Open Match—13-1/2 lbs.

	(100 yds) Match 1	**(200 yds) Match 2**	**(Agg) Match 3**
J. Gilbert	98-4x 1st	90-1x 2nd	188-5x Winner
C. Rittall	93	93-1x 1st	186-1x 1st
N. St. Pierre	95-1x 2nd	DNF	DNF
J. Lynds	93	89	182 2nd
M. Torpacka	95-1x	81	176-1x
R. Veilleux	89	84-1x	173-1x
A. Cooley	91	78	169
H. Curry	83	85	168
D. Caruso	91-2x	73	164
S. Miller	90-1x	54	144
A. Garcelon	86-1x	DNF	DNF
W. Blick	67-1x	50	117

Heavy Varmint—Light Varmint Group Match

	H.V. 3-5 Shot	**L.V. 3-5 Shot**	**2 Gun Agg**
D. Caruso	.525 1st	.505 2nd	.515 1st
J. Gilbert	.617 2nd	.497 1st	.557
R. Bradeen	1.013	.684	.848
J. Lynds	.968	1.033	1.000
S. Miller	1.743	1.065	1.404
R. Veilleux	DNF	.869	DNF
A. Cooley	.809	DNF	DNF

MATCH REPORT

Considering the wind barrage we keep having during our Benchrest Competition, some real fine scores were fired with the 308's. In the afternoon during the Open Match the conditions were so bad that you couldn't see any 22 cal. holes and it was almost impossible to see the 30 cal. at 200 yards. I decided to use my Hunter 10 lb. 308 against those Heavy Varmint 222's—6x47's and 6mm pc's. Only C.W. Rittall seems to be able to place those shots where he wants them at the 200 yards distance. I hope the next match will give us better conditions. I would like to say thanks to a great bunch of shooters for their support and help when needed.

A special thanks again to Norm St. Pierre for a fine job in scoring. Thanks to Rick Bradeen, Range Officer, Doc Garcelon, Referee, Dan Caruso and Roland Veilleux, targets for a job well done as usual.

Next Benchrest June 11, 1978.

Good shooting,
J.O. Gilbert, Match Director

IBS Registered Hunter Rifle Match
Izaak Walton League, York, Pa. Apr. 16, 1978

Name	Score	Cal.	Rifle	Scope	Bullet	Load	Primer	Case
1. G. Green*	247-10	308	Rem.	Pecar	168 Gr.	38 Gr.	Alcan	Norma
Hughesville, Pa.			Hart	6X	Sierra	4064		
2. R. Linn*	245-7	308	Rem.	Lyman	168 Gr.	39 Gr.	CCI BR	Fed.
York, Pa.			Hart	6XP	Sierra	3031		
3. R. Drexler	245-5	6HLS	Rem.	Weaver	85 Gr.	38 Gr.	Rem.	Rem.
Churchville, Pa.			Hart	T6	Sierra	760		
4. V. Pastorella	244-7	308	Rem.	Lyman	168 Gr.	41 Gr.	Fed.	Fed.
Milnesville, Pa.			Hart	6X	Sierra	4895		
5. E. Gates	241-7	308	Rem.	Leupold	168 Gr.	42 Gr.	Fed.	Govt.
Harrisburg, Pa.			Hart	3-9	Sierra	4895		
6. P. Olewine	241-5	6mm	Rem.	Leupold	68 Gr.	—	Fed.	Win.
Dauphin, Pa.			Hart	3X9	—	4895		
7. L. Loucks	240-3	308	Rem.	Leupold	168 Gr.	41 Gr.	Rem.	DWM
York, Pa.			Dgls	6X	Sierra	4895		
8. P. Thompson	239-6	308	Rem.	Weaver	168 Gr.	40 Gr.	Fed.	Govt.
Dauphin, Pa.			Hart	4-12	Sierra	4064		
9. W. Wagman	238-6	308	Rem.	Leupold	168 Gr.	37 Gr.	Rem.	Rem.
Dallastown, Pa.			Rem.	3.5x10	Sierra	3031		
10. R. Parry	237-3	308	Rem.	Lyman	168 Gr.	39 Gr.	Rem.	Win.
Forksville, Pa.			Shln	6X	Sierra	3031		
11. Agnes Sabo	236-6	308	Rem.	Lyman	168 Gr.	39 Gr.	Fed.	Fed.
Hazleton, Pa.			Hart	6X	Sierra	4895		
12. B. Druck	236-5	308	Rem.	Lyman	168 Gr.	41 Gr.	Fed.	Fed.
Dover, Pa.			Hart	6X	Sierra	4895		
13. L. Ressler	232-3	308	Rem.	Weaver	168 Gr.	41 Gr.	Fed.	Fed.
York, Pa.			Hart	6X	Sierra	748		
14. C. Eckrote	230-1	308	Rem.	Lyman	168 Gr.	38.5 Gr.	Fed.	Fed.
Drums, Pa.			Hart	6X	Own	3031		
15. R. Stiffler	224-0	6-250	Rem.	Weaver	70 Gr.	30.5 Gr.	CCI	Win.
Shrewsbury, Pa.			Hart	T6	Sierra	748		
Hunter								
1. J. L. Grim*	224-0	308	Rem.	Leupold	168 Gr.	39 Gr.	—	Govt.
York, Pa.			Hart	3-9	Sierra	3031		
2. J. Cowey	223-4	6X47	Rem.	Weaver	70 Gr.	29 gr.	Rem.	Fed.
York, Pa.			Shln	6X	Sierra	748	7.5	
Unregistered Varmint								
1. Guy Green*	232-6	222						
Hughesville, Pa.								
2. C. Pardoe	229-3	6X47	Rem.	—	70 Gr.	23.5 Gr.	Rem.	Fed.
Muncy, Pa.			Rem.	20	Sierra.			

Guy Green won warm-up with 50-2
*Awarded prize money.

Weather was clear, cool and quite windy. A number of top shooters dropped quite a few points. I don't know if it was conditions, or maybe they were just out of practice due to the long cold winter. Our attendance was a little light be we hope to see it come up next month. Next month we expect to shoot Registered Varmint for score along with the Hunter match. IBS fee for this is $1.00. Hunter is $.50. Varmint registration fee will be $4.50. For grand Agg. prizes this year we will count the 100 Yd. portion of Aug. 19th State Championship due to June shoot being 200 Yds. Thanks to all those who attended. We hope to see you all next month.

R.A. Linn, Secretary.

GUNSTOCKS
CHOOSE FROM 100,000

Fajen's fabulous Full Color Catalog is a Reference Book every Gun Lover will want to have. Contains complete information on Stock Styles, wood selections and designs. Write today.

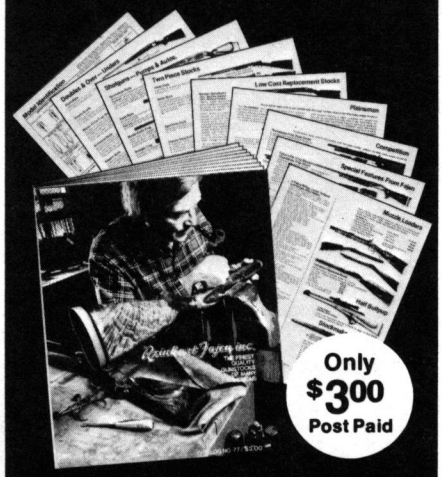

REINHART FAJEN, INC.
DEPT. PS WARSAW, MISSOURI 65355

INTERNATIONAL BENCHREST SHOOTERS APPLICATION

Name .....

Address .....

City ..... State ..... Zip .....

IBS MEMBERSHIP

( ) IBS membership and PS for one year — $10.00

( ) Associate member (no magazine) other members of same household — $4.00

( ) Junior member (no magazine) under age 16 — $2.00

( ) Club Affiliation and PS for one year — $10.00

( ) New ( ) Renewal

MAIL MEMBERSHIP TO:
EVELYN RICHARDS
411 N. Wilbur Ave., Sayre, Pa. 18840

For membership make checks payable to IBS.

PRECISION SHOOTING SUBSCRIPTION

( ) Precision Shooting, one year — $6.00

( ) Precision Shooting, two years — $11.00

( ) Precision Shooting, outside U.S. & Canada — $7.00 each year

( ) New ( ) Renewal

MAIL PRECISION SHOOTING MAGAZINE SUBSCRIPTION TO:
PRECISION SHOOTING
Box 6, Athens, Pa. 18810

For subscription ONLY make checks payable to Precision Shooting.

Official IBS Varmint & Heavy Bench Rifle Match Schedule 1978

July 1-2	South Creek	HV, LV PA State Championship
July 8	Fairfax	LV for score
July 9	Fairfax	HV for score
July 14-16	Mainville	300-100-200 HV, LV, BR
July 29-30	Camillus	HV, LV
August 5 & 6	Mainville	200-300 yard Championships HV, LV, BR
August 12-13	Stittsville	HB, International 100 & 200 Championship + Registered HV & SP
August 24-27	Council Cup	HV, LV, SP, International Varmint Championship
September 9-10	Englishtown	HV, LV, NJ State Championship 100 yards only, 9:00 a.m.
September 23-24	Pine Tree	HV, LV, HB (5 shot)

Official IBS Hunter Match Schedule 1978

July 8	E.B.S.A.	100 yd.	5:00 p.m.
July 9	Mainville	200 yd.	Noon
July 23	York (IWLA)	100 yd. York County Championship	
July 29	Saginaw	100 yard	Noon
July 30	Sulphyr Springs	HTR & Varmint for score	Noon
August 6	Central Penn	100 yd.	Noon
August 12	Englishtown	100 yd. NJ Championship	3:00 p.m.
August 19-20	York (IWLA)	100 — 200 yd. + HV score Championship	
August 20	Capital City	R & P 200 yd. Maine Championship	
August 27	Central Penn	100 yd.	Noon
September 3	Mainville	200 yd. & Varmint for score	Noon
September 9	E.B.S.A.	100 yd.	5:00 p.m.
September 10	York (IWLA)	100 yd. & Varmint for score	Noon
September 16-17	Mainville	International Championship 100 & 200 yd.	
September 17	Capital City	R & P 100 yds., Maine Championship	
September 23	Saginaw	100 yd.	Noon
September 24	Central Penn	100 yd.	Noon
October 1	Sulphyr Springs	100 yd. & Varmint for score	Noon
October 8	Mainville	100 yd.	Noon
October 14	E.B.S.A.	100 yd.	5:00 p.m.
October 15	York (IWLA)	100 yd.	Noon
October 29	Central Penn	100 yd.	Noon
November 5	Mainville	100 yd.	Noon

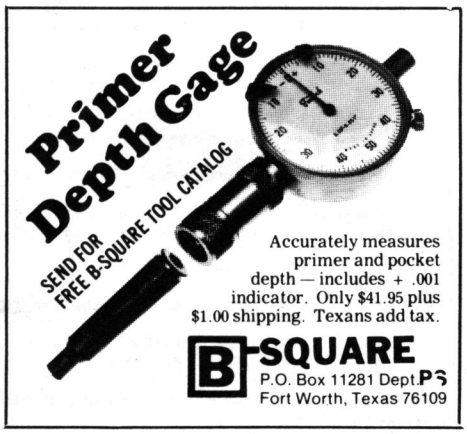

BACK ISSUES AVAILABLE
50 cents each

1975—All but Feb., May and September.
1974—All but March
1973—All but February, March and July
1972—All issues on hand
1971—All but January
1970—All but January, April, May, June and July
1969—All but June
1968—All but February
1967—All but December

AIR GAGE BARRELS

FOR CLOSEST TOLERANCE — In "Chrome-Moly" and Stainless Steel. All calibers up to 458 Winchester. Blanks or Finished Turned in standard or target tolerance chambers.

Ask for free data on all our services.
DISCOUNTS TO GUNSMITHS

Write to

DOUGLAS BARRELS, INC.
5504 Big Tyler Road
Charleston, West Virginia 25312